FULCO SYSTEM

WAVE litter bin | **KWA016.00**

From collection WAVE

WAVE tall cylindrical litter bin made of wood and steel.

The KWA016.00 model has a galvanized steel insert with a capacity of 40 liters, a system lock and is mounted on a leg.

The WAVE collection is perfect for park projects and places of rest. Ergonomic shapes are an invitation to use and give the investment a prestigious character.

Dimensions and materials available below.

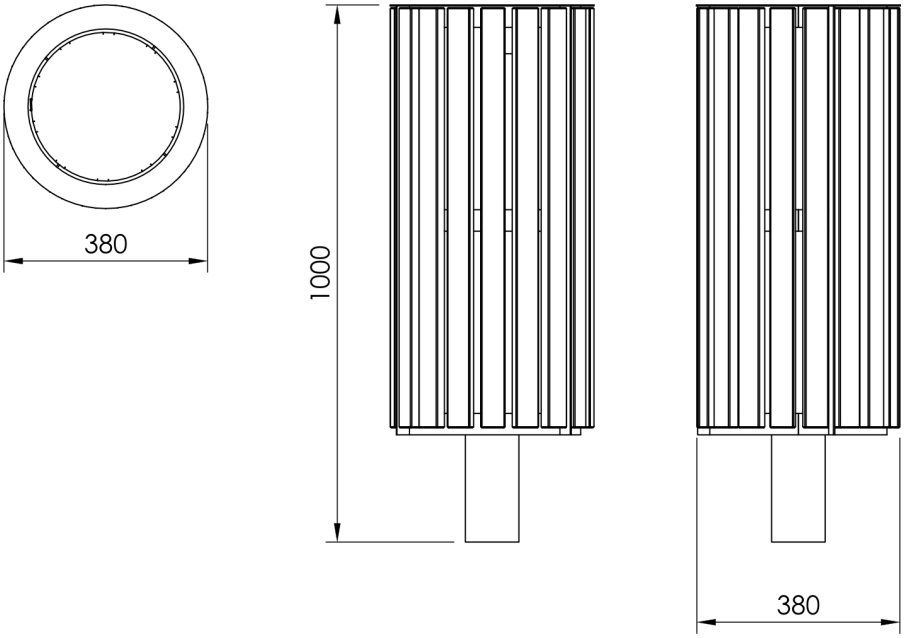

MATERIALS

WOOD

SAPELI

IROKO

ASH

WAVE litter bin | **KWA016.00**

From collection WAVE

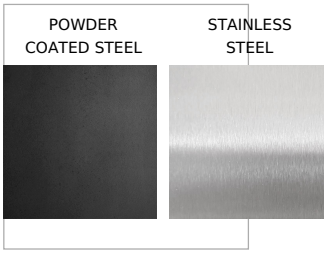

www.fulcosystem.com

contact@fulco.pl

phone no.:+48 32 305 05 80